USER MANUAL

MARSTEK

V6000

Energy Storage System

V 1.0

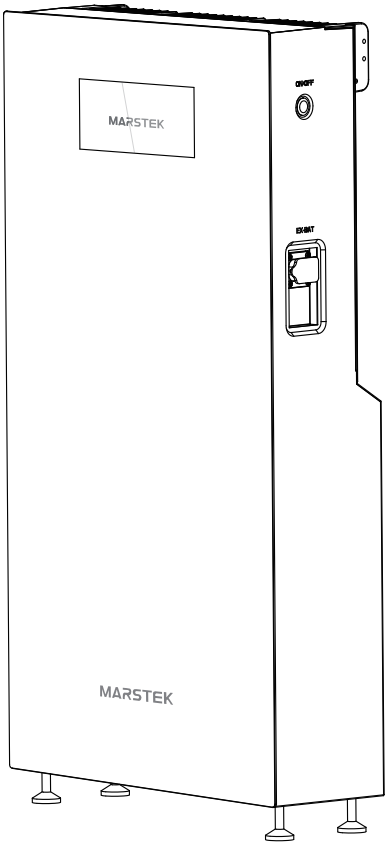

About this Manual

This manual provides information about the MARSTEK V6000. More information can be obtained through the official website eu.marstekenergy.com. Please retain this manual until the end of the product's life cycle.

Target Audience for this Manual: Product owners capable of interacting with the product, or qualified personnel responsible for installation/commissioning.
Qualified personnel should possess the following skills: Training in electrical system installation and commissioning, as well as skills for handling hazards.
Familiarity with this manual and other relevant documents, and knowledge of local regulations and directives.

Due to product development needs, the content of the product manual may be updated or revised. Please obtain the latest version of the manual from the official website eu.marstekenergy.com.

Disclaimer

Please carefully observe the following safety precautions. The warranty will not apply if physical injury, data loss, or damage occurs due to failure to follow the instructions.

- Close supervision is necessary when the product is used near children.
- The use of accessories not recommended or sold by us may result in fire, electric shock, or personal injury.
- Do not use the product for purposes exceeding its rated output power. Overloading the output beyond its rated value may result in fire or personal injury.
- Do not use damaged or modified products or accessories. Damaged or modified batteries may exhibit unpredictable behavior, leading to fire, explosion, or injury risk.
- Do not operate the product if the power cord, plug, or output cable is damaged.
- Do not disassemble the product. Service or repair should be performed by qualified service personnel. Incorrect reassembly may result in fire or electric shock.
- Do not expose the product to fire or high temperatures. Exposure to flame or temperatures exceeding 130°C may cause explosion.
- If the power supply leaks electricity or emits an odor, immediately move it away from open flames.
- Have service performed by qualified repair personnel using only identical replacement parts. This ensures that product safety is maintained.
- Do not pierce the power supply housing with nails or other sharp objects, and never strike or step on the power supply.
- During operation, the product may generate heat. This is a normal operating condition and no cause for concern.

- When charging the built-in battery, operate in a well-ventilated area and never restrict ventilation in any way.
- Do not clean the product with harmful chemicals or detergents.
- Do not use the product outside its specified operating environment.
- Improper use, dropping, or excessive force may damage the product.
- Do not expose this product to direct sunlight for extended periods, such as inside a car, cargo hold, or any other location potentially exposed to high temperatures. Doing so may cause product malfunction, performance degradation, or heat generation.
- Battery maintenance should be carried out or supervised by personnel familiar with batteries and the necessary precautions.
- Do not use this product near strong static electricity or strong magnetic fields.
- Do not expose this product to flammable or explosive gases or fumes.
- Do not stand on the product.
- Do not immerse the product in water.
- Do not use the power supply if it emits an abnormal odor, heats up, deforms, changes color, or exhibits any other abnormality.
- Reverse engineering, decompiling, disassembling, modifying, implanting, or performing any other derivative operations on the device/software is strictly prohibited. Studying its internal implementation logic, obtaining source code, infringing upon intellectual property rights in any way, or disclosing software performance test results is also forbidden.
- Dispose of waste materials according to relevant regulations. For more details, follow local laws and regulations regarding battery recycling and disposal.

The company assumes no responsibility for the following situations or their consequences:

- Equipment damage caused by natural disasters (such as earthquakes, floods, volcanic eruptions, mudslides, lightning strikes, fires, wars, armed conflicts, typhoons, hurricanes, tornadoes, extreme weather, or force majeure events).
- Failure to operate the equipment according to the conditions specified in this manual.
- Installation and use in environments not conforming to relevant international, national, or regional standards. Installation or operation performed by unauthorized personnel.
- Failure to follow the operating instructions and safety warnings provided in the product documentation.
- Unauthorized disassembly or modification of the product (including changes to software code).
- Damage caused during transport by the user or third parties acting on behalf of the user.
- Damage caused by storage conditions not meeting the requirements specified in the product documentation.
- Use of materials and tools that violate local laws, regulations, or applicable standards.
- Damage caused by negligence, gross negligence, willful misconduct, improper operation, or any other reasons not attributable to the company.

Content

1. SAFETY PRECAUTIONS	1
1.1 Safety Sign Defination	1
1.2 Safety Precautions	1
1.3 Safety Requirements	2
1.4 Battery Safety	3
1.5 Emergency Situations	4
2. PRODUCT OVERVIEW	5
2.1 Dimensions	6
2.2 Symbol on Label	6
2.3 Performance & Parameters	7
3. TRANSPORTATION AND STORAGE	9
3.1 Transportation	9
3.2 Storage	9
4. INSTALLATION	11
4.1 Pre-installtion Check	11
4.2 Site Requirements	13
4.3 Installation Steps	13
5. PRODUCT INTRODUCTION	16
5.1 Interface and Button Description	16
5.2 Display Introduction	19
5.3 System Layout	20
6. COMMISSIONING AND OPERATION	20
6.1 Working Mode Introduction	20
7. SYSTEM MAINTENANCE	21
7.1 Routine Maintenance for Users	21
7.2 Major Maintenance by Professionals	22
8. MARSTEK APP FOR SMART CONTROL	23
8.1Download the MARSTEK App	23
8.2 MARSTEK App Operation Guide	23
9. APPENDIX	24
Alarm Code Index	24

SAFETY PRECAUTIONS

1.1 Safety Sign Defination

DANGER	**Danger.** Indicates an imminently hazardous situation which, if not avoided, will result in death or serious injury.
WARNING	**Warning.** Indicates a potentially hazardous situation which, if not avoided, could result in death or serious injury.
CAUTION	**Caution.** Indicates a potentially hazardous situation which, if not avoided, could result in minor or moderate injury.
NOTICE	**Notice.** Indicates a situation which could lead to damage or failure of equipment, systems, or property, but is not related to personal injury.
!	**Tips.** Provides useful information and best practices for the optimal use of equipment or to achieve a task more efficiently.

1.2 Safety Precautions

The MARSTEK V6000 has been designed and tested in accordance with international safety standards. However, safety regulations must still be followed during the installation and operation of the MARSTEK V6000 series. Installers must carefully read, fully understand, and strictly adhere to all instructions, cautions, and warnings contained in this installation manual.
All operations, including transportation, storage, installation, use, and maintenance, must comply with applicable laws, regulations, standards, and specifications. The equipment must be used in an environment that meets the specified design conditions. Any equipment failure, malfunction, or component damage resulting from improper environments is not covered under the product quality warranty. The company assumes no liability for compensation related to personal injury, property damage, etc.

When installing, commissioning, operating, and maintaining the product, strictly follow the safety requirements on the product labels and in the manual. Incorrect operation or work may lead to: injury or death to the operator or third parties, or damage to the product and other property.

Do not perform any operations on the product (including but not limited to handling, installing, energizing, or maintaining the product, making electrical connections, or working at heights) during severe weather conditions. Such weather conditions include thunderstorms, rain, snow, and winds of force 6 or stronger. In case of fire, immediately evacuate the building or product area and call the fire department. Under no circumstances is it permitted to re-enter the burning area.

Unapproved Uses

The system is not designed for, and shall not be connected to, critical infrastructure including:

- Elevator systems.
- Essential emergency medical equipment.
- Fire and rescue equipment.
- Any device that, once stopped, may pose a threat to human safety or cause serious economic losses.

Before commencing any work, carefully read all safety instructions and always comply with them when operating or handling the product. Failure to adhere to the precautions described in this section may result in serious personal injury or property damage.

1.3 Safety Requirements

DANGER

- Always power off the entire system, including the grid and PV supply, before installation, maintenance, or cable handling. Installing or removing cables while energized can cause electric arc, sparks, fire, or explosion, resulting in severe personal injury or death.
- Non-standard or improper operation on energized equipment may cause fire, electric shock, or explosion, resulting in property damage, serious personal injury, or death.
- Remove conductive objects such as watches, bracelets, and rings before operating the equipment to prevent electric shock.
- Use only the battery model recommended by the manufacturer. Incorrect battery types pose a risk of fire or explosion.
- Protect the product from mechanical shock, vibration, puncture, or crushing. Physical damage to the product may cause it to catch fire.
- Do not operate the equipment in the presence of flammable or explosive gases or dust. Performing operations in such an environment can cause an explosion.
- Battery electrolyte is toxic and volatile. If you suspect a leak, do not contact the liquid or inhale gases. Immediately evacuate the area and contact a qualified professional. Professionals handling a leaking battery must wear rubber gloves, goggles, a gas mask, and protective clothing, power off the unit, isolate the battery, and contact technical support.

WARNING

- For equipment requiring grounding, always connect the grounding cable first during installation and disconnect it last during removal.
- To prevent overheating, fire, or damage, ensure that ventilation openings and heat dissipation systems are not blocked or covered during operation.
- Do not touch the heat sinks while the equipment is operating, as they can be extremely hot and cause burns.
- Do not drill holes into the equipment. This can compromise its sealing (IP rating), electromagnetic shielding, and damage internal components, leading to malfunctions or hazards.

CAUTION

- Ensure all necessary tools are ready and have been inspected by a professional body. Do not use tools that are damaged (e.g., with scratched insulation) or have not passed inspection.
- Do not use the equipment if it shows any signs of defect, such as leakage, deformation, or abnormal operation. Contact your installer or sales representative. Do not disassemble the equipment by yourself.

NOTICE

- Do not mix and match with other unauthorized third-party products, as this may result in product damage. We are not responsible for any issues caused by this practice.

1.4 Battery Safety

This product is an all-in-one off-grid energy storage system with a built-in battery.

DANGER

Explosion Risk: Do not apply any strong force to the battery. Do not mechanically damage the battery (e.g., piercing, deforming, disassembling, etc.). Do not heat the battery or dispose of it in fire. Do not install the battery in potentially explosive environments. Do not immerse the battery in water or other liquids.

Fire Risk: Do not place the battery near heat sources, such as direct sunlight, fireplaces, uninsulated walls exposed to sunlight, hot water, or heaters. Keep ignition sources such as sparks, flames, and smoking materials away from the battery.

Electric Shock Risk: Do not disassemble the battery. Do not handle wet batteries or use wet tools. Do not immerse the battery in water or expose it to moisture or liquids. Keep the battery away from children and animals. Wear appropriate clothing, protective gear, and gloves to prevent direct contact with DC voltage, and use insulated tools when handling the battery. Remove metal jewelry before working on DC circuits.

Use the product only as intended and designed. Follow local standards when using the product. Any intentional damage will void the battery's limited warranty. Handle the product with care to prevent damage.

- The product must only be installed in suitable locations.
- Do not use the product if it is defective, has cracks, is broken or damaged, or fails to operate normally.
- Do not use the product together with other types of batteries.
- Do not pull, drag, or step on the battery.
- Do not leave any foreign objects inside the product.
- Do not repair or modify the product, as it is not user-serviceable.
- Do not disconnect any cables while the product is energized.
- Do not damage the sheathing of cables, harnesses, and connectors.
- During battery charging, use, and storage, keep it away from materials that easily generate electrical discharges, including electrostatic discharge.
- Keep the product away from infants and children to avoid any accidents.
- Prevent the product from direct contact with rain, snow, and water. Prevent dropping or mechanical shock during transportation.

1.5 Emergency Situations

1.5.1 Electrolyte Leakage

DANGER

Misuse or damage to the battery may lead to increased internal pressure within the battery cells, potentially causing electrolyte leakage. In the event of battery electrolyte release:

Do not enter the room under any circumstances.

Avoid contact with leaking liquid or emitted gas.

Call local emergency services or the fire department if necessary. If exposure to the leaked substance occurs, follow these recommendations to minimize the risk of injury:

- Inhalation: Evacuate the contaminated area and seek medical attention.
- Eye contact: Rinse eyes thoroughly with plenty of clean water for at least 15 minutes and seek immediate medical attention.
- Skin contact: Thoroughly wash the affected area with plenty of water for at least 15 minutes. If possible, remove clothing contaminated with the substance or saturate it thoroughly with water. Seek medical assistance promptly if the individual feels unwell.
- Ingestion: Induce vomiting and seek immediate medical attention. Wipe the contact area with a wet sponge or cloth until medical assistance is obtained.

1.5.2 Fire

DANGER

Follow these steps for firefighting operations:
1. Turn off all connected power systems or electronic devices, such as the battery, battery isolator, AC isolator, main solar power switch, and main normal power supply switch.
2. Before entering the hot zone of the accident site, adequately suppress the fire first.
3. If the battery itself is on fire, use fire sand, a carbon dioxide (CO2) fire extinguisher, or other emergency firefighting equipment approved for electrical fires to extinguish the fire.
4. If the fire is not caused by the battery and has not yet spread to the battery area, use a Type ABC fire extinguisher to put out the fire. Remove the battery and other ignition sources from the fire scene. It may take considerable time to completely extinguish the fire. The presence of smoke indicates the battery may still be burning. Be aware of the risk of the battery reigniting.

1.5.3 Flooding

If the battery becomes submerged in water, do not let anyone touch it. First, turn off all circuit breakers in the system to disconnect power to the battery. Wait for the floodwaters to recede and do not approach the battery. If someone needs to enter the flooded water, wear insulated, full-length rubber boots and gloves. Then, contact our company or an authorized service partner for technical support. Do not reuse a battery that has been flooded with water.

PRODUCT OVERVIEW

MARSTEK V6000 is an Waterproof 6kW Inverter/15kWh Battery All-in-One Energy Storage System. It has a pure sine wave inverter (peak power 12kW), 15kWh expandable LFP battery (up to 90kWh) with 6000+ cycles, and 2 MPPTs (9kW Max PV input). It supports parallel scaling up to 6 sets (Power Range:6kW-36kW), 4 charging methods, IP65 waterproof, MARSTEK App control,and 2000m Operating Altitude.

2.1 Dimensions(Unit: mm,tolerance：±1mm)

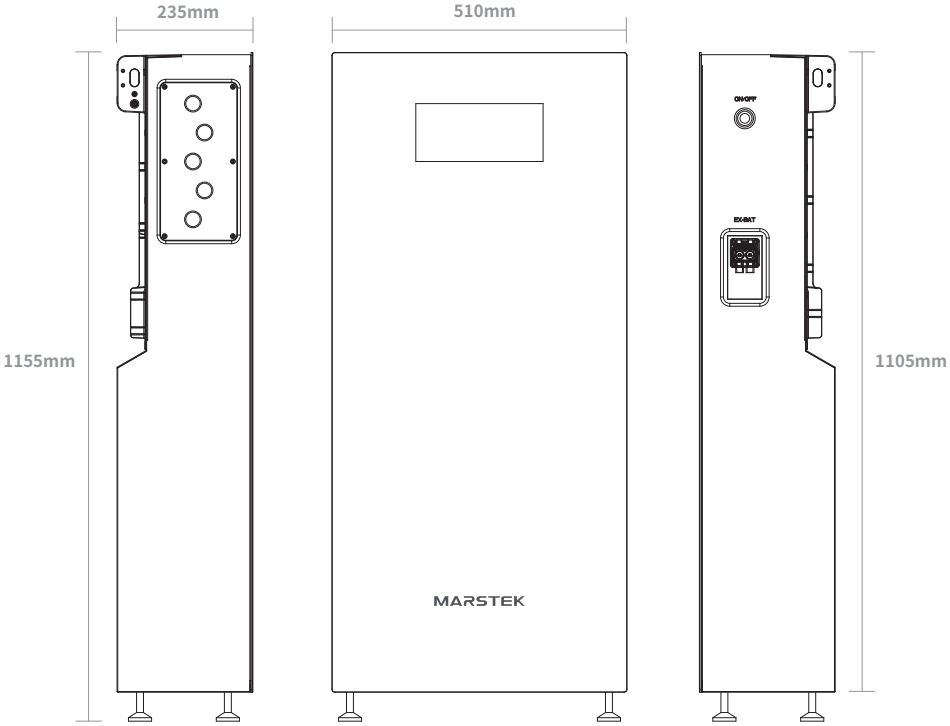

2.2 Symbol on Label

Symbol	Explanation
	Warning! Brun hazard. Surfaces in the heat dissipation area become hot during operation. Do not touch to prevent burns.
	Warning! Risk to life. Potential hazards exist during and after equipment operation. Always use appropriate protective measures when working with this equipment.
	Refer to operating instructions. Indicates that users should refer to operating or installation instructions befor proceeding.

	CE mark. The inverter complies with the requirements of the applicable CE
	Separate collection of batteries. Please follow the REGULATION (EU) 2023/1542 of the european parliament and of the council to return batteries/rechargeable batteries to the appropriate local collection facilities.
	The inverter can't be disposed together with the household waste. Disposal information can be found in the enclosed documentation.
	No fire or open flame. Prohbit any open flame from or near the system.
10min	Warning! Delay Discharge. Internal components may retain hazardous energy after power-off. Allow at least 10 minutes for complete discharge as indicated on the label before proceeding.

2.3 Performance & Parameters

MARSTEK V6000

Battery	
Battery Capacity (Wh)	15072Wh (314Ah*1P*15S*3.2V)
Battery Chemistry	Lithium Iron Phosphate
Nominal Voltage	48V
Life Cycles (Down to 80% DOD)	6000
AC Output	
Inverter Continuous (W)	6kW
Inverter Peak (W)	12kW
Inverter Type	Pure Sine Wave
Inverter Voltage/Freq.	230V/50Hz
AC Output Current	26.1A
AC Output Max Current	29A
AC Output Port(s)	Quick-Connect Terminal*1 (40A)

DC Input	
Solar Input Channels	2
Solar Input Power	4.5kW*2
Solar Input Voltage	80V-500V
Solar Input Current	13.5A Max. * 2
Solar Input Port	Quick-Connect Terminal*2
AC Input	
Input Voltage/Freq. Rated	230V/50Hz
Input Voltage Range	184V~276V
Input Current	32.6A
AC In Power	7.5kW
AC Charge Power	6kW
AC Bypass Power	6kW
AC Input Port	Quick-Connect Terminal*1
General	
Battery type	LiFePO4
Dimensions (W/H/D)	(L*W*H)510*235*1155mm
Weight	136.4±1kg
Cycle times	6000times（down to 80% DOD）
Charging Temperature	0°C~50°C
Discharging Temperature	-10°C~50°C
Storage Temperature	-20°C~60°C
Relative Humidity	0~95%
Ingress Protection	IP65
Protection Level	I
Overvoltage/Voltage Withstand Level	II
Cooling Strategy	Natural Cooling
Max. Operating Altitude	4000m
Display	Segment Display
Product Certification	UN38.3 & MSDS
Protection	
Safety protection feature	Insulation monitoring, Residual current monitoring, DC reverse polarity protection, AC OV/OC/SC protection, Type II DC/AC surge protection.

TRANSPORTATION AND STORAGE

3.1 Transportation

This notice applies to equipment transportation operations by users in scenarios such as daily handling and short-distance transshipment, and is intended to ensure equipment safety and transportation compliance. This notice serves only as a supplement to local regulations; please transport this product in compliance with all applicable local laws and regulations.

Transportation Environmental Restrictions

1. During transportation, avoid exposing the equipment to extreme temperature environments. It is strictly prohibited to leave the unit in direct sunlight inside a vehicle, open truck, or similar spaces for extended periods, to prevent thermal runaway of the battery due to high temperatures.
2. The equipment must be kept away from liquids such as rain, snow, and seawater. Adequate rainproof and moisture-proof measures must be taken during transportation to avoid short circuits caused by water ingress into the interfaces.
3. Do not stack the equipment with sharp metal objects or heavy weights, to prevent deformation of the casing due to compression.

Prohibited Transportation Actions

1. It is strictly prohibited to charge the equipment or connect it to a load for discharging during transportation.
2. It is strictly prohibited to disassemble the equipment's battery pack and transport the battery separately without authorization.
3. It is strictly prohibited to carry flammable, explosive, corrosive, or strong magnetic items in the same transportation space as the equipment.

3.2 Storage

Storage Environment Requirements

The storage environment temperature must be controlled between **-20°C and 60°C**, with a relative humidity of ⩽ 95% and **non-condensation**. The unit must be placed in a dry, well-ventilated indoor environment away from direct sunlight, heat sources (e.g., radiators, fireplaces, ovens), and strong electromagnetic interference sources (e.g., high-power transformers, radar equipment). This storage environment minimizes the battery's self-discharge rate. Long-term storage in environments below -20°C or above 60°C is strictly prohibited, to avoid degradation of battery activity.

Battery State of Charge (SOC) Management

Prior to storage, adjust the equipment's State of Charge (SOC) to **50%–60%**: Storing lithium batteries at full charge can easily cause permanent capacity loss, while storing them at a low charge can lead to over-discharge failure.

For long-term storage, recharge the equipment every **1–2 months** to maintain the SOC within the 50%–60% range. After recharging, disconnect the charger to avoid damaging the battery due to float charging.

Storage Protection Measures

When storing the equipment, keep the casing clean and dry. If dust or stains accumulate on the surface, wipe it with a dry soft cloth. Do not use organic solvents (e.g., acetone, alcohol) for cleaning.

Turn off all input/output switches of the equipment and disconnect all external cables to prevent accidental energization or short circuits.

Store the equipment in an upright position. Do not invert, place on its side, or stack it. For long-term storage, a dustproof and moisture-proof bag can be used, but ventilation gaps must be reserved to prevent moisture accumulation due to sealing.

Prohibited Storage Actions

- It is strictly prohibited to store the equipment in damp, dusty, or corrosive gas environments (e.g., basements, coastal areas, chemical workshops).
- It is strictly prohibited to place metal objects (e.g., keys, coins, screwdrivers) on the equipment's output interfaces, to prevent short circuits.
- It is strictly prohibited to disassemble the equipment casing or modify the internal circuit during storage.
- It is strictly prohibited to directly store damaged equipment (e.g., with a cracked casing, electrolyte leakage, or deformed interfaces). Contact an authorized service provider for inspection and repair first.

Post-Storage Activation Inspection

Before activating the equipment after long-term storage:

1. First inspect the appearance for integrity and ensure the interfaces are clean and free of foreign objects.
2. Connect the charger to recharge the unit to an SOC of 80% or higher, and observe for any abnormal heating or unusual noises.
3. Test the equipment's functions and interfaces such as AC OUT and PV Input. Confirm no faults are present before putting it into normal use.

INSTALLATION

The whole system shall be installed and configured by professional technicians who are

- Company authorized.
- Familiar with local standards and relevant safety regulations of electrical systems.
- Formally trained and certified in the installation of energy storage systems (ESS).
- Experienced in ESS installation, capable of identifying and mitigating potential risks, and responsible for completing all necessary commissioning and documentation.

DANGER

After the system is professionally installed

- Do not relocate or reposition any system components.
- Do not modify electrical wiring, connections, or non-user system settings.
- Do not tamper with or adjust external accessories, including smart meter, and power distribution box connection.
- Only authorized personnel may perform these tasks.

4.1 Pre-installation Check

4.2.1 Package

Before beginning any installation work, complete the following checks to ensure a safe and successful installation.

- Check outer packaging for serious damage (holes, cracks, crushing). If any damage is found, contact your vendor for help.
- Confirm the model on the shipping label matches your order. If receiving unsuitable model, contact your vendor for help.
- Unpack and check all items for visible damage. Additionally, please verify all components against the packing list. If any accessories are lost or damaged, contact your vendor for help.

Packing List

MARSTEK V6000

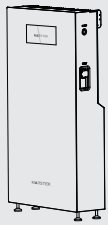

X1

User Manual

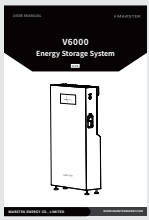

X1

Quick Guide

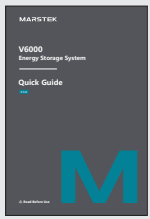

X1

Warranty Card

X1

PG Cable Gland	Wall Bracket	M6 Screw	M8 Expension Bolt	Wire Ferrule
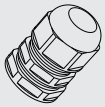				
X5	X2	X4	X2	X10

4.2.2 Tools

Check the following protective equipments and installation tools before installtion.

Protective Equipments					
Safety hat		Goggles		Insulating gloves	
Protective gloves		Dust mask		Insulating shoes	

Installation Tools					
Power drill	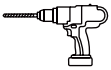	Heat shrink tube		Ferrule crimp tool	
Screwdriver set	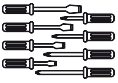	Crimping pliers		Level	
Marker		RJ45 crimp tool		Wire stripper	
Tape measure		Cable tie		Wire cutter	
Adjustable pipe wrench	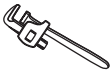	Heat gun		Hammer	

4.2 Site Requirements

Floor Mounting and Angle Requirements: The energy storage equipment must be installed vertically. Do not tilt it forward, backward, sideways, or install it upside down.

Clearance and Safety Requirements: Appropriate clearance space must be maintained around the MARSTEK V6000 equipment. This is essential to meet the requirements for heat dissipation and safety isolation.

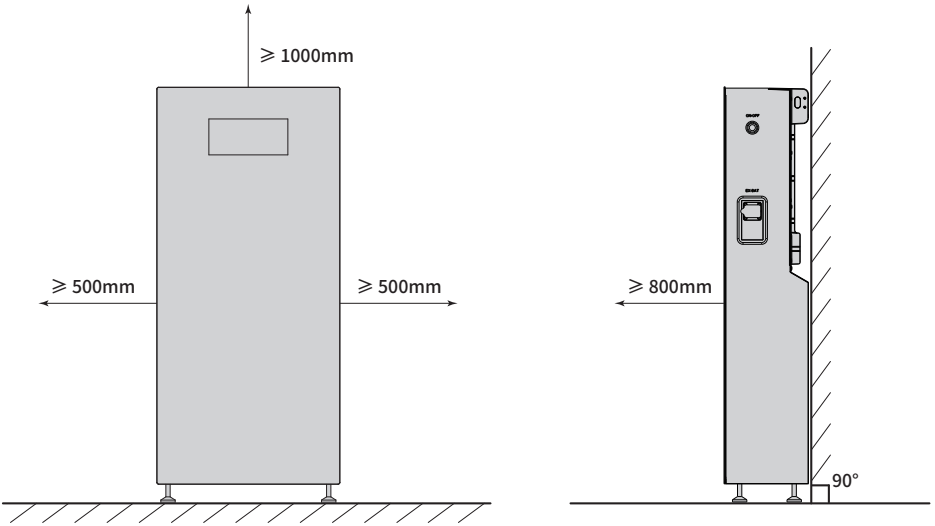

4.3 Installation Steps

1. Install the Wall Bracket in the corresponding position using screws.

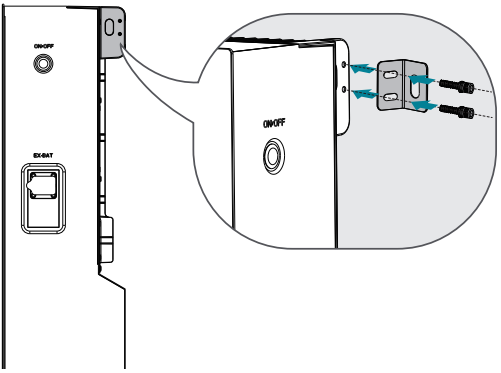

2. Use a wrench to adjust the two front feet pads so that the MARSTEK V6000 is level, preventing the device from tipping forward. The Wall Bracket should fit tightly against the wall.

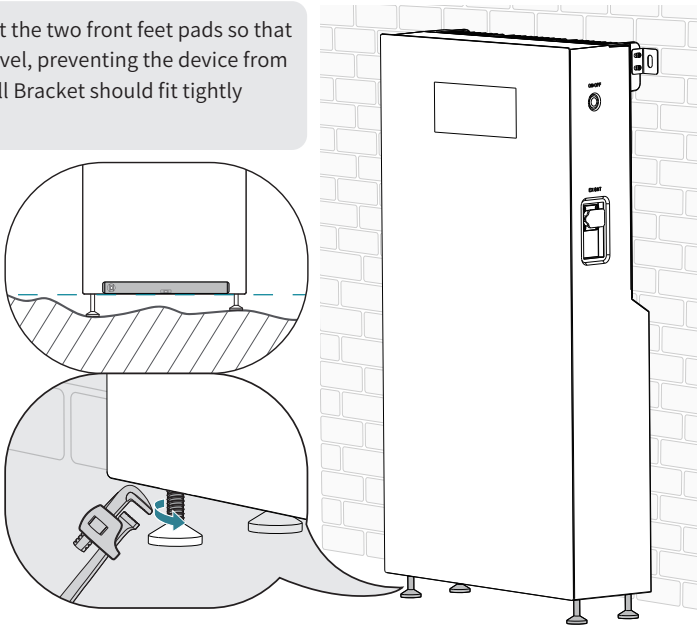

3. Secure the Unit

- Mark holes according to Wall Bracket position.
- Move unit away for safe drilling access.
- Drill holes at marked positions as per diagram specifications.
- Insert M8 Expansion Bolts into drilled holes.
- Reposition unit and tighten screws to secure.

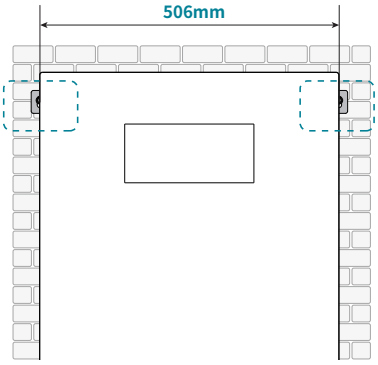

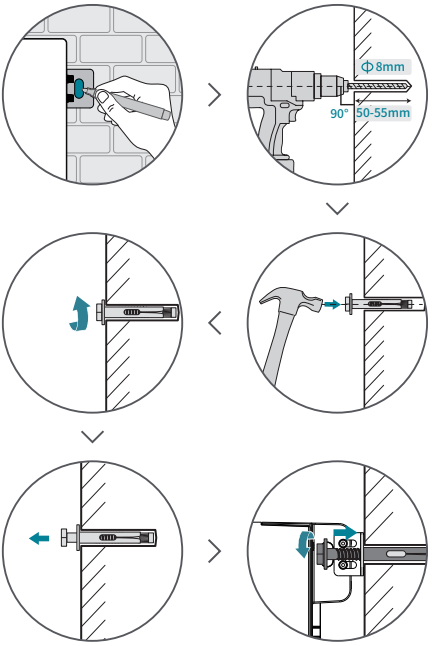

4. Remove the side panel.

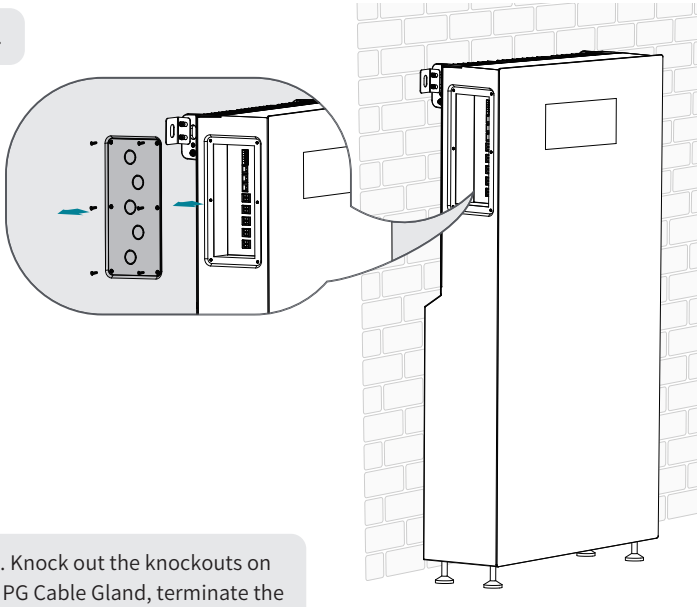

5. Install the ground wire. Knock out the knockouts on the side panel, install the PG Cable Gland, terminate the wire using Wire Ferrules, and reinstall the side panel.

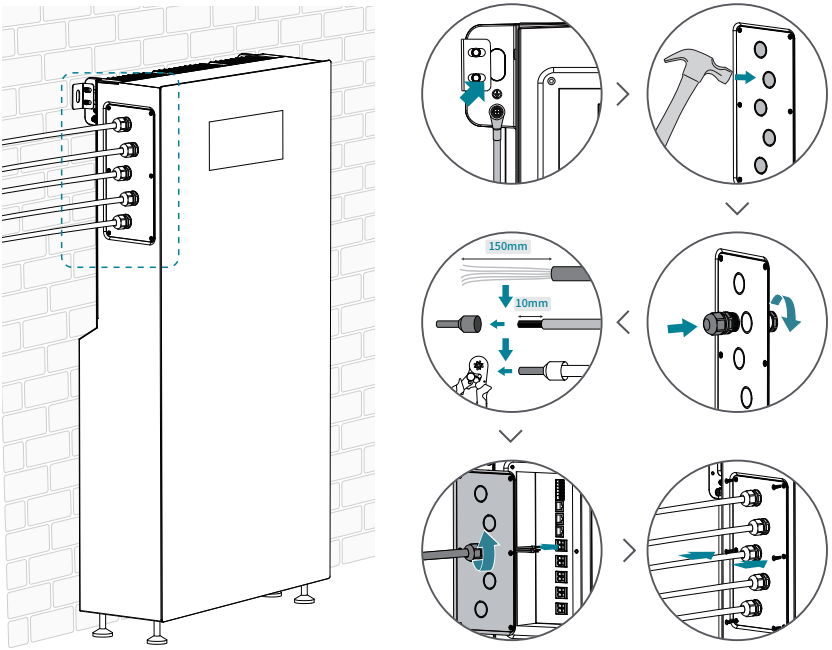

For mechanical installation details, please refer to the official website's documents and video support.

PRODUCT INTRODUCTION

5.1 Interface and Button Description

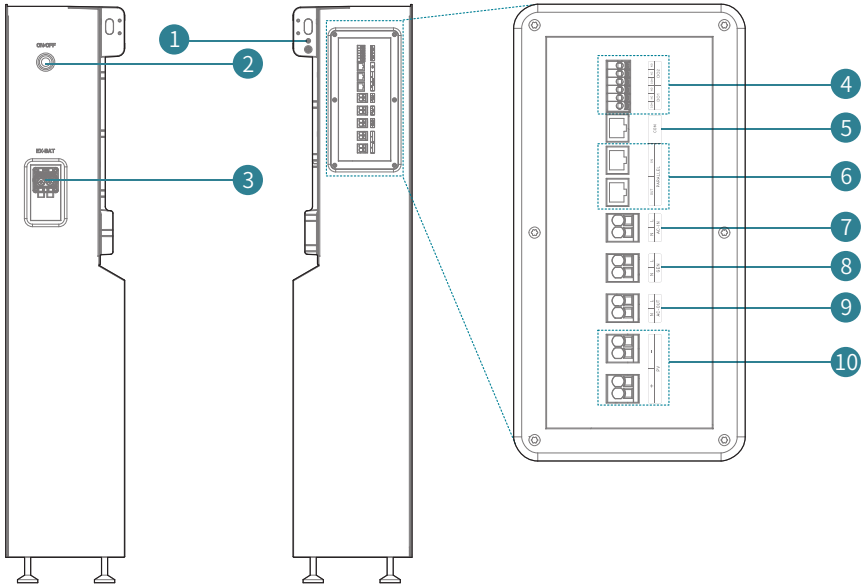

No.	Name	Marking	Description
1	Protective Earthing (PE) Point	⏚	Enclosure grounding.
2	System Switch	ON/OFF	Main power switch for turning the system on or off.
3	Extra Battery Port	EX-BAT	Expansion battery port for connecting battery packs recommended by MARSTEK to increase system capacity.
4	Digital Output	DO1/DO2	For controlling external devices (e.g., relays, alarms, or auxiliary loads).
5	Communication Port	COM	For system monitoring, configuration, and data transmission.
6	Parallel Port	PARALLEL	System parallel communication port.
7	AC Input Port	AC-IN	AC grid input port for battery charging and bypass power supply.
8	Generator Terminal	GEN	Single phase generator power terminal.
9	AC Output Port	AC-OUT	AC power output port for supplying power to connected loads.
10	PV Terminal	PV- / PV+	PV input port for connecting solar panels.

5.1.1 Wire stripping requirements

- **Wire Gauge Requirements by Interface**

Interface	Recommended Wire Gauge (AWG)
PV	10-12 AWG
AC-OUT / GEN / AC-IN	8-10 AWG
DO1 / DO2	20-24 AWG
RJ45	24AWG

- **AC Power:**

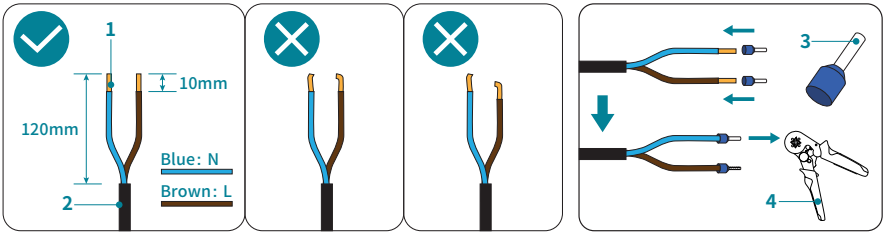

No.	Name	No.	Name
1	Core wire	3	Crimp wire ferrule
2	Cable	4	Ferrule crimp tool

- **DC Power:**

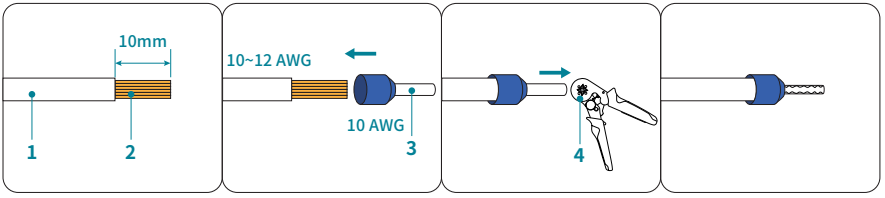

No.	Name	No.	Name
1	Cable	3	Crimp wire ferrule
2	Core wire	4	Ferrule crimp tool

- **RJ45:**

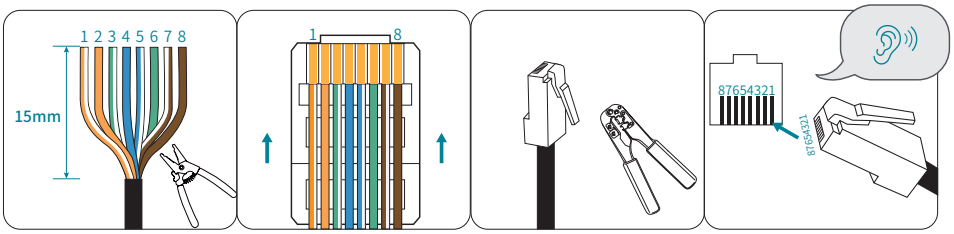

Color	White-Orange	Orange	White-Green	Blue	White-Blue	Green	White-Brown	Brown
Pin Defination	1	2	3	4	5	6	7	8
COM	+15VDC	RS485B1	RS485A1	COM+5V	COM-GND	RS485B	RS485A	
PARALLEL IN	COM-GND	COM-GND	SYN.BUS	PARA.BUS	HOST.BUS	120R	CAN.H	CAN.L
PARALLEL OUT	COM-GND	COM-GND	SYN.BUS	PARA.BUS	HOST.BUS	120R	CAN.H	CAN.L

DANGER All wiring and connections to the AC-IN, GEN, AC-OUT, and PV terminals must be performed only when the unit is completely disconnected from all power sources and in a non-energized state. Failure to do so may result in electric shock, serious personal injury, or equipment damage.

WARNING All operations related to the wiring harness must be performed only when MARSTEK V6000 is in power-off state.

5.1.2 Power ON/OFF

POWER ON

- When the device is off, briefly press the "ON/OFF" power button to power it on. The device will then enter the power-on state.
- In the power-on state, the screen on the front of the device lights up.
- Please note: When the device is off, connecting AC-IN, GEN, or PV for charging will also activate the device and bring it into the power-on state.

POWER OFF

- Before powering off, ensure that AC IN, PV+, and PV- are all disconnected; otherwise, the device cannot be shut down.
- Before powering off, ensure that any connected loads are in a state where they can be safely disconnected.

5.2 Display Introduction

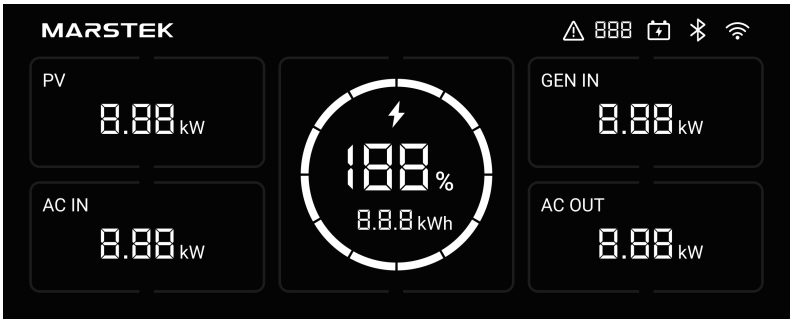

Display Symbols		Status	Description
	Extra Battery Pack Indicator	Lit icon	Connected
		Unlit icon	Not connected
	Bluetooth Status	Lit icon	Connected
		Unlit icon	Not connected
	Wi-Fi Status	Lit icon	Connected
		Unlit icon	Not connected
	Charging Status	Blinking icon	Charging
		Solid Light	Discharging
		Unlit icon	Idle (no activity)
PV	Current PV (Photovoltaic) Power	Numbers	Connected
		—	Not connected
AC IN	Grid Power (AC)	Numbers	Connected
		—	Not connected
GEN IN	Generator Power	Numbers	Connected
		—	Not connected
AC OUT	Load Output Status	Numbers	Connected
		—	Not connected
888	Fault Indicator	Lights up and displays a three-digit fault code when a fault occurs. See the appendix for code details.	
	Charge/Discharge Status	**Charging:** Ring fills progressively from 0% to the current level in a continuous cycle, showing charging progress. **Discharging:** Segments below the current SOC remain steadily lit, while the highest segment flashes at 1Hz, indicating remaining capacity.	
188 %	State of Charge (SOC)	Shows the current battery/power level as a percentage.	
8.8.8 kWh	Remaining Battery Power	Displays battery capacity/power value in kWh.	

5.3 System Layout

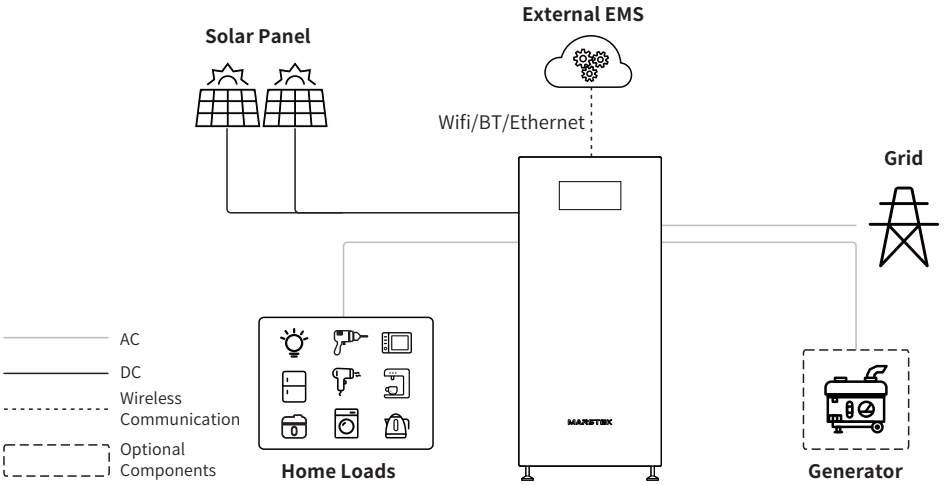

COMMISSIONING AND OPERATION

6.1 Working Mode Introduction

Through the MARSTEK App, you can adjust the working mode of the MARSTEK V6000 to Backup Mode or Economic Mode. For details, refer to 7.2 App Operation Guide.

6.1.1 Backup Mode

Backup Mode is the default working mode of the MARSTEK V6000. In this mode, the V6000 schedules utility power and PV to prioritize maintaining the SOC at 100%. If you need the V6000 to stay at a high charge level as a backup energy source, set it to Backup Mode.

- Scenario 1: Utility power and PV are both available → Utility power supplies the load, and PV charges the battery.
- Scenario 2: Utility power is unavailable, but PV is available → PV supplies the load as a priority.
- Scenario 3: Neither utility power nor PV is available → The battery supplies the load.

6.1.2 Economic Mode

When enabling this mode, you must first set the Discharge SOC and Charge SOC via the MARSTEK App (100% > Discharge SOC > Charge SOC > 0). In this mode, the V6000 intelligently schedules utility power and PV using advanced algorithms to provide a more cost-effective energy solution.

- Scenario 1: If the current SOC is above the Discharge SOC → The V6000 will not use utility power. It supplies the load using only PV or the battery.
- Scenario 2: If the current SOC is between the Discharge SOC and Charge SOC → The V6000 supplies the load using utility power, PV, or the battery based on current load and PV conditions. During this process, utility power is not used to charge the battery.
- Scenario 3: If the current SOC is below the Charge SOC → The V6000 supplies the load using utility power, PV, or the battery based on current load, grid, and PV conditions. During this process, utility power is actively used to charge the battery.

SYSTEM MAINTENANCE

During normal operation of the MARSTEK V6000, please ensure that environmental conditions meet all requirements specified in the Specifications. Additionally, the device should not be exposed to harsh weather conditions.
If the device malfunctions, do not use it. Resume normal use only after the issue is resolved. Inspect the MARSTEK V6000 at least once every six months to ensure each component is in good condition. Cooling components must not be obstructed in any way.

7.1 Routine Maintenance for Users

Routine maintenance is essential for ensuring your system's optimal performance, longevity, and safety. We strongly recommend you to perform routine maintenance according to instructions below.

7.1.1 Visual Inspections (Monthly Recommended)

Ensure there are no signs of corrosion on the terminals or connectors of battery (if visible without opening the unit).
Check for any alarm codes on the display panel.
Inspect for any loose cables or connections in the system.
Keep surrounding area free from flammable materials, liquids, and excessive dust.

7.1.2 Cleaning (As Needed)

Always turn the system OFF before cleaning.
Use a soft, dry cloth to wipe the exterior surfaces of the battery unit, inverter, and display.Do not use any liquid cleaners, solvents,or abrasive sprays, as they can damage the electronics orcause a short circuit.

7.1.3 System Performance Monitoring

Check the State of Charge (SOC), power flow (charging from solar/grid vs. discharging to home), and overall energy statistics.
A significant, unexplained drop in capacity or performance may indicate an issue. Contact support if this occurs.

7.2 Major Maintenance by Professionals

If any of the following abnormal conditions are detected during routine maintenance, or if the system experiences unexplained performance degradation, cease use of the MARSTEK V6000 immediately and contact your supplier or our company to arrange for major maintenance:
Persistent alarm codes on the display.

Unusual noises, odors, or visible signs of overheating, bulging, or leakage from the battery or inverter.
A significant, unexplained drop in system capacity or output power over a short period of time.
Any cables, terminals, or connectors showing signs of burning, discoloration, or that cannot be securely tightened.

⚠ DANGER

WARNING: Deep maintenance, annual servicing, or any operations that involve opening the equipment enclosure or accessing internal high-voltage components must NOT be performed by the user. These operations pose a serious risk of electric shock and equipment damage, and must only be carried out by our certified professional technicians.

MARSTEK APP FOR SMART CONTROL

8.1 Download the MARSTEK App

The MARSTEK App can connect to all your devices via Bluetooth or Wi-Fi, allowing you to track energy consumption and generation in real time, dynamically display real-time device status data, and keep full control of your device's energy management.
This software supports mobile operating systems running Android 6.0 or higher, and iOS 12.0or higher.
This application is continuously updated and optimized; therefore, the instructions in this guide may differ from the features of the latest app version.

Download the app

- Android: Download via Google Play
- iOS: Download via App Store
- Download Link: https://eu.hamedata.com/ems/apk/marstek/index.html
- QR Code Download:

8.2 MARSTEK App Operation Guide

Scan the QR code to access the user instructions for MARSTEK App.

APPENDIX

Alarm Code Index

Code	Alarm	Suggestions
001	BUS Overvoltage	1. Restart the unit. Check if the fault clears. 2. If the problem persists, contact the manufacturer for technical support.
002	BUS Undervoltage	1. Restart the unit. Check if the fault clears. 2. If the problem persists, contact the manufacturer for technical support.
003	BUS Soft-Start Timeout	1. Restart the unit. Check if the fault clears. 2. If the problem persists, contact the manufacturer for technical support.
004	Inverter Soft-Start Timeout	1. Restart the unit. Check if the fault clears. 2. If the problem persists, contact the manufacturer for technical support.
005	Inverter Overcurrent (Software)	1. Remove all loads, restart the unit.Try reconnecting with a smaller load(optional). Check if the fault clears. 2. If the problem persists, contact the manufacturer for technical support.
006	Inverter Overcurrent (Hardware)	1. Remove all loads, restart the unit.Try reconnecting with a smaller load(optional). Check if the fault clears. 2. If the problem persists, contact the manufacturer for technical support.
007	Inverter Undervoltage	1. Restart the unit. Check if the fault clears. 2. If the problem persists, contact the manufacturer for technical support.
008	Inverter Overvoltage	1. Restart the unit. Check if the fault clears. 2. If the problem persists, contact the manufacturer for technical support.
009	Inverter Output Short Circuit	1. Remove all loads, restart the unit.Try reconnecting with a smaller load(optional). Check if the fault clears. 2. If the problem persists, contact the manufacturer for technical support.
010	Inverter Circuit Sensor Fault	1. Restart the unit. Check if the fault clears. 2. If the problem persists, contact the manufacturer for technical support.

Code	Alarm	Suggestions
011	Unexpected Current Feedback Into Inverter	1. Power off the unit. Contact the manufacturer for technical support immediately.
012	Overload	1. Remove all loads, restart the unit.Try reconnecting with a smaller load(optional). Check if the fault clears. 2. If the problem persists, contact the manufacturer for technical support.
013	Output Current Sensor Fault	1. Restart the unit. Check if the fault clears. 2. If the problem persists, contact the manufacturer for technical support.
014	Current Sharing Sensor Fault	1. Restart the unit. Check if the fault clears. 2. If the problem persists, contact the manufacturer for technical support.
015	Input/Output Reverse Connection	1. Power off the unit. Contact the manufacturer for technical support immediately.
016	Output Relay Fault	1. Power off the unit. Contact the manufacturer for technical support immediately.
017	Battery Overvoltage	1. Discharge the unit. If the problem persists, contact the manufacturer for technical support.
018	Buck-Boost Overcurrent	1. Restart the unit. Check if the fault clears. 2. If the problem persists, contact the manufacturer for technical support.
019	Buck-Boost Current Sensor Fault	1. Restart the unit. Check if the fault clears. 2. If the problem persists, contact the manufacturer for technical support.
020	Buck-Boost Filter Current Sensor Fault	1. Restart the unit. Check if the fault clears. 2. If the problem persists, contact the manufacturer for technical support.
021	DC/DC Soft-Start Failure	1. Restart the unit. Check if the fault clears. 2. If the problem persists, contact the manufacturer for technical support.
022	Buck-Boost Hardware Overcurrent	1. Remove all loads, restart the unit.Try reconnecting with a smaller load(optional). Check if the fault clears. 2. If the problem persists, contact the manufacturer for technical support.

Code	Alarm	Suggestions
023	LLC Overcurrent	1. Remove all loads, restart the unit.Try reconnecting with a smaller load(optional). Check if the fault clears. 2. If the problem persists, contact the manufacturer for technical support.
024	LLC Transformer Fault	1. Power off the unit. Contact the manufacturer for technical support immediately.
025	PV Overvoltage	1. Power off the unit and check if the PV input is normal. 2. Restart the unit. 3. If the problem persists, contact the manufacturer for technical support.
026	PV Short Circuit	1. Power off the unit and check if the PV input is normal. 2. Restart the unit. 3. If the problem persists, contact the manufacturer for technical support.
027	PV Power Abnormality	1. Power off the unit and check if the PV input is normal. 2. Restart the unit. 3. If the problem persists, contact the manufacturer for technical support.
028	PV Input Overcurrent	1. Power off the unit and check if the PV input is normal. 2. Restart the unit. 3. If the problem persists, contact the manufacturer for technical support.
029	Fan Locked Rotor	1. Power off the unit. Contact the manufacturer for technical support immediately.
030	PV Side Overtemperature / NTC Disconnected	1. Power off the unit and check the ambient temperature. 2. Place the unit in an environment with a temperature range of 0°C to 50°C and let it rest for 10 minutes, then restart. 3. Check if the fault clears. If the issue persists, contact the manufacturer for technical support.
031	Inverter Side Overtemperature / NTC Disconnected	1. Power off the unit and check the ambient temperature. 2. Place the unit in an environment with a temperature range of 0°C to 50°C and let it rest for 10 minutes, then restart. 3. Check if the fault clears. If the issue persists, contact the manufacturer for technical support.
032	LLC Low-Voltage Side Overtemperature / NTC Disconnected	1. Power off the unit and check the ambient temperature. 2. Place the unit in an environment with a temperature range of 0°C to 50°C and let it rest for 10 minutes, then restart. 3. Check if the fault clears. If the issue persists, contact the manufacturer for technical support.

Code	Alarm	Suggestions
033	LLC High-Voltage Side Overtemperature / NTC Disconnected	1. Power off the unit and check the ambient temperature. 2. Place the unit in an environment with a temperature range of 0°C to 50°C and let it rest for 10 minutes, then restart. 3. Check if the fault clears. If the issue persists, contact the manufacturer for technical support.
034	LLC Transformer Overtemperature	1. Power off the unit and check the ambient temperature. 2. Place the unit in an environment with a temperature range of 0°C to 50°C and let it rest for 10 minutes, then restart. 3. Check if the fault clears. If the issue persists, contact the manufacturer for technical support.
035	Parallel CAN Communication Fault	1. Check the parallel wiring connections. 2. If the problem persists, contact the manufacturer for technical support.
036	Parallel Master Signal Loss	1. Check the parallel wiring connections. 2. If the problem persists, contact the manufacturer for technical support.
037	Parallel Sync Signal Loss	1. Check the parallel wiring connections. 2. If the problem persists, contact the manufacturer for technical support.
038	Parallel Version Mismatch	1. Attempt to upgrade the software to the latest version and check if the fault clears. 2. If the problem persists, contact the manufacturer for technical support.
039	Parallel Output Current Fault	1. Restart the unit. Check if the fault clears. 2. If the problem persists, contact the manufacturer for technical support.
040	Parallel Output Configuration Error	1. Check the parallel operation configuration settings.
041	Incorrect Standalone Wiring Used in Parallel Mode	1. Verify that the parallel wiring and configuration settings are consistent.
101	Module Overvoltage	1. Power off the unit and wait for 5 minutes. Power on the unit and check if the fault clears. 2. If the problem persists, contact the manufacturer for technical support.
102	Module Undervoltage	1. Connect the unit to the grid or PV to charge the battery. Check if the issue resolves. 2. If the problem persists, contact the manufacturer for technical support.

Code	Alarm	Suggestions
103	Cell Overvoltage	1. Power off the unit and wait for 5 minutes. Check if the fault clears. 2. If the problem persists, contact the manufacturer for technical support.
104	Cell Undervoltage	1. Connect the unit to the grid or charger to charge the battery. Check if the issue resolves. 2. If the problem persists, contact the manufacturer for technical support.
105	Cell Overtemperature	1. Power off the unit and wait. Check if the fault clears. 2. If the problem persists, contact the manufacturer for technical support.
106	Cell Undertemperature	1. Check the ambient temperature. 2. Restart the unit and check if the fault clears. 3. If the problem persists, contact the manufacturer for technical support.
107	MOSFET Overtemperature	1. Check the ambient temperature. 2. Restart the unit and check if the fault clears. 3. If the problem persists, contact the manufacturer for technical support.
108	Charge Overcurrent	1. Disconnect the grid and PV supply, then restart the unit. Check if the fault clears. 2. If the problem persists, contact the manufacturer for technical support.
109	Discharge Overcurrent	1. Remove all loads, restart the unit.Try reconnecting with a smaller load(optional). Check if the fault clears. 2. If the problem persists, contact the manufacturer for technical support.
110	System Fault Protection	1. Restart the unit. Check if the fault clears. 2. If the problem persists, contact the manufacturer for technical support.
111	Charge MOSFET Failure	1. Power off the unit. Contact the manufacturer for technical support immediately.
112	Discharge MOSFET Failure	1. Power off the unit. Contact the manufacturer for technical support immediately.
113	Ambient Overtemperature Protection	1. Check the ambient temperature. Keep the device in an environment of 0-50°C. 2. If the issue does not resolve, contact the manufacturer for technical support.

Code	Alarm	Suggestions
114	Ambient Undertemperature Protection	1. Check the ambient temperature. Keep the device in an environment of 0-50°C. 2. If the issue does not resolve, contact the manufacturer for technical support.
115	Short Circuit Protection	1. Restart the unit. Check if the fault clears. 2. If the problem persists, contact the manufacturer for technical support.
201	MQTT Session Connection Failed: Client Identifier Occupied	1. Restart the unit. Check if the fault clears. 2. If the problem persists, contact the manufacturer for technical support.
202	MQTT Session Connection Failed: Socket Connection Failure	1. Restart the unit. Check if the fault clears. 2. If the problem persists, contact the manufacturer for technical support.
203	MQTT Client-Server Connection Failed	1. Restart the unit. Check if the fault clears. 2. If the problem persists, contact the manufacturer for technical support.
204	INV: No Response to Prepare Upgrade Command	1. Restart the unit. Check if the fault clears. 2. If the problem persists, contact the manufacturer for technical support.
205	BMS: No Response to Prepare Upgrade Command	1. Restart the unit. Check if the fault clears. 2. If the problem persists, contact the manufacturer for technical support.

Scan the QR code to obtain the latest user manual.
More language updates are underway...

WEEE Reg. No.:89860626

Website APP Store LinkedIn YouTube

Email: support@marstekenergy.com
Official Website: https://eu.marstekenergy.com/

Marstek Energy Co., Limited

Add: Rooms 1318-19,13/F, Hollywood Plaza,
610 Nathan Road,Mongkok, Kowloon, HK.
Tel: 86-755-28398778
Fax: 86-755-28398779
Made in China

MARSTEK

Power Anywhere & Anytime